PART NUMBER: 260-1004-TUNC/260-1004-TUNS/260-1004-TUNU/260-1004-TUNW

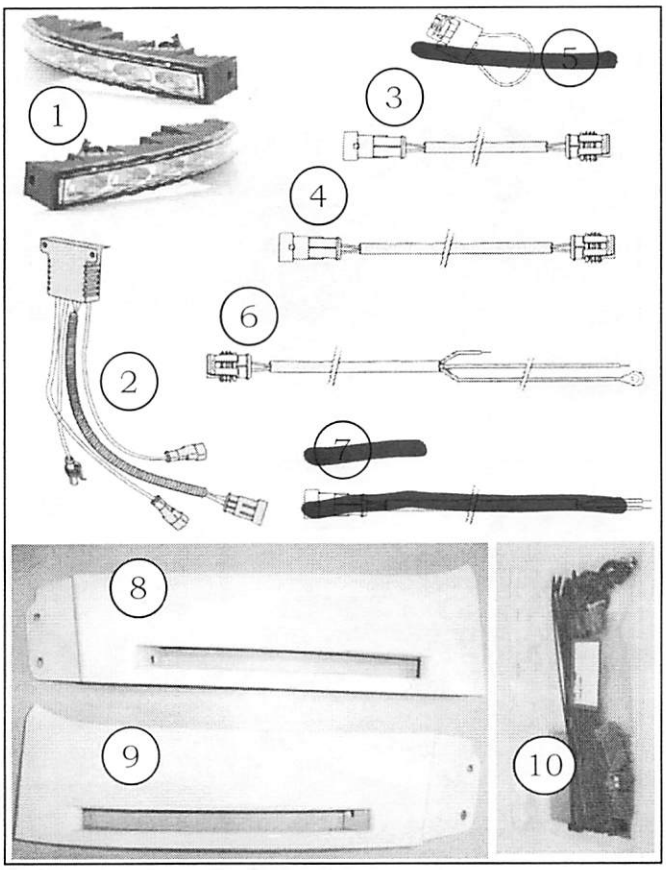

KIT CONTENTS

ITEM	QTY	DESCRIPTION
1	2	LED DRL LIGHTS
2	1	DRL CONTROL MODULE
3	1	DRL EXTENSION HARNESS (SHORT)
4	1	DRL EXTENSION HARNESS (LONG)
[redacted]		
6	1	POWER HARNESS
[redacted]		
8	1	LEFT DRL PANEL
9	1	RIGHT DRL PANEL
10	1	HARDWARE BAG

RECOMMENDED TOOLS

INSTALLATION TOOLS	
FASTENER REMOVAL TOOL	WIRE CUTTERS
TRIM REMOVAL TOOL	
10-MM WRENCH	
POWER DRILL/DRIVER	8 & 10MM SOCKET
SOLDER TOOL	

COLOR APPLICABILITY/TRIM LEVEL

VEHICLE TRIM COLOR \ ACCESSORY COLOR														
TUNB BLACK														
TUNC CHROME														
TUNS SILVER														
TUNU UNPAINTED														
TUNW WHITE														

GENERAL APPLICABILITY

ALL MODELS

RECOMMENDED SEQUENCE OF APPLICATION

* MANDATORY

LEGEND

STOP: DAMAGE TO VEHICLE MAY OCCUR. DO NOT PROCEED UNTIL PROCESS COMPLIANCE HAS BEEN MET.

OPERATOR SAFETY: USE CAUTION TO AVOID RISK OF INJURY.

CRITICAL PROCESS: PROCEED WITH CAUTION TO ENSURE A QUALITY INSTALLATION. THESE POINTS WILL BE AUDITED ON A COMPLETED VEHICLE INSTALLATION.

GENERAL PROCESS: THIS HIGHLIGHTS SPECIFIC PROCESSES TO ENSURE A QUALITY INSTALLATION. THESE POINTS WILL BE AUDITED DURING THE ACCESSORY INSTALLATION.

TOOLS & EQUIPMENT: THIS CALLS OUT THE SPECIFIC TOOLS AND EQUIPMENT REQUIRED FOR THE PROCESS.

REVISION MARK: THIS MARK HIGHLIGHTS A CHANGE IN INSTALLATION WITH RESPECT TO PREVIOUS ISSUE.

SPECIAL NOTE: INSTALLATION SEQUENCES

AFTER **SAFETY** MANDATED PREPARATORY STEPS HAVE BEEN TAKEN, THE INSTALLATION SEQUENCE IS THE SUGGESTED METHOD FOR COMPLETING THE ACCESSORY INSTALLATION. IN SOME INSTANCES THE SUGGESTED SEQUENCE IS WRITTEN FOR ONE ASSOCIATE TO INSTALL AND IN OTHERS THE SEQUENCE IS GIVEN AS PART OF A TEAM ACCESSORY INSTALLATION. UNLESS OTHERWISE STATED IN THE DOCUMENT, THE ASSOCIATES MAY PERFORM THE INSTALLATION STEPS IN ANY ORDER TO MAKE THE INSTALLATION AS EFFICIENT AS POSSIBLE WHILE MAINTAINING CONSISTENT QUALITY.

VEHICLE PREPARATION

CAUTION: It is advisable to disconnect the negative battery cable for 3 minutes before beginning installation, to avoid unintended air bag deployment. Note and record any anti-theft radio codes prior to disconnecting.

VEHICLE PREPARATION

1. Place DRL led lights into right and left side Tundra panels. **Figure 1**

2. Use a 10mm wrench to assemble the DRL led lights to the panels with the hardware provided in kit. **Figure 2**

3. Lift the hood. Place protective fender covers on the fenders.

4. Remove the lower left and right headlight trim by disengaging the two clips as shown in **Figure 3**.

NOTE: Be careful not to use excessive force on the panels when removing them. Use a trim panel tool and pull outward from the front of the vehicle. Do NOT pull the panels outward as this may cause the mounting posts to break.

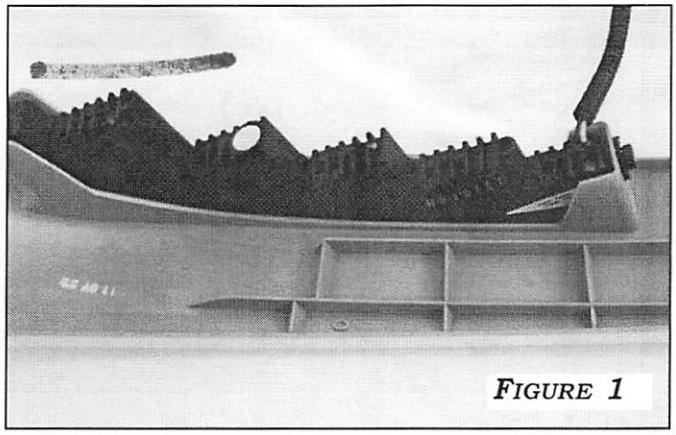

Figure 1

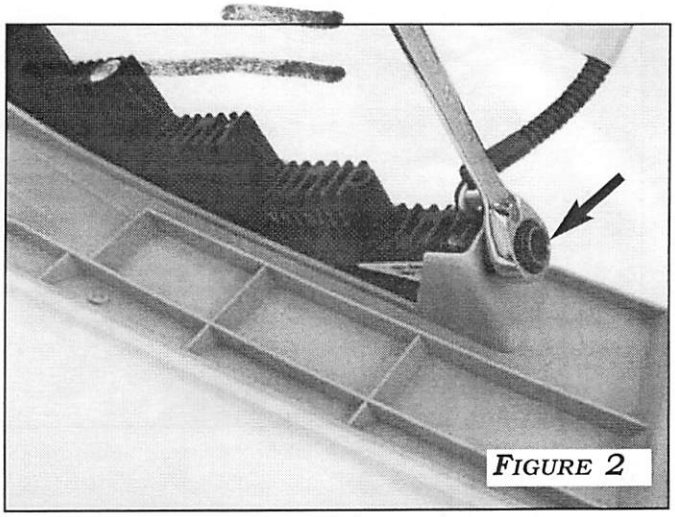

Figure 2

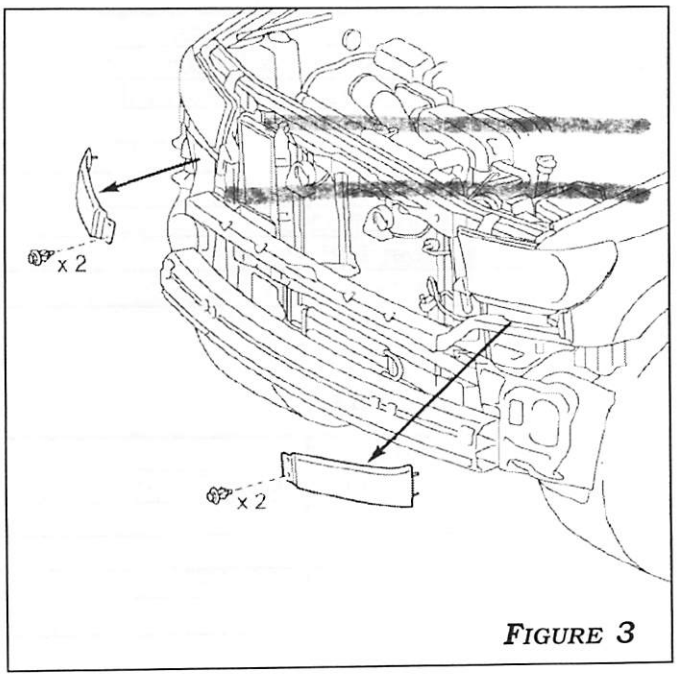

Figure 3

INSTALLATION

DRL Mounting and Wire Routing

1. Mount the DRL assemblies in reverse order of removal of headlight trim panels. Observe the parts to make sure "L" is mounted on the left and "R" is mounted on the right. **Figure 5**

2. Connect the DRLs to the DRL extension harness and route the harness along the front bumper so that the 4-pin waterproof connector at the end of the harness reaches the area behind the left (driver side) headlight. Secure the harness to the factory wiring and bumper structure with wire ties. **Figure 6**

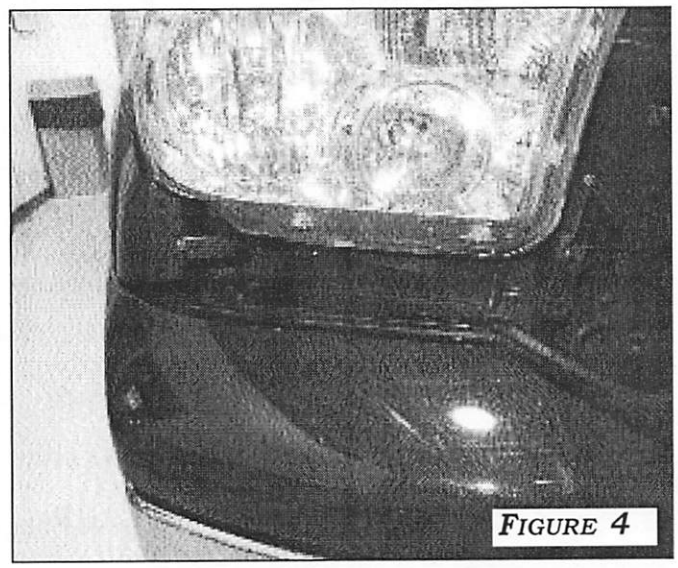

Figure 4

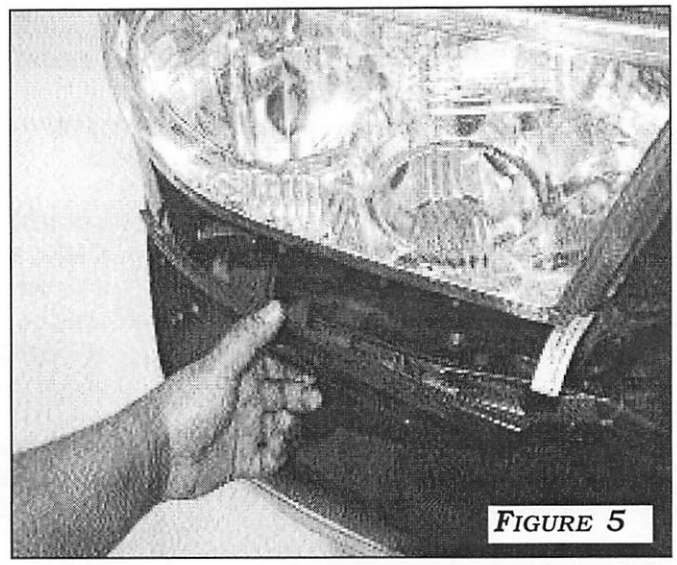

Figure 5

STEP 2: Electrical Installation (see Figure 7)

1. Connect the Short DRL Extension Harness to the Black/White connector of the Control Module and the Driver's side DRL.
2. Connect the Long DRL Extension Harness to the Grey/White connector of the Control Module and the Passenger's side DRL.

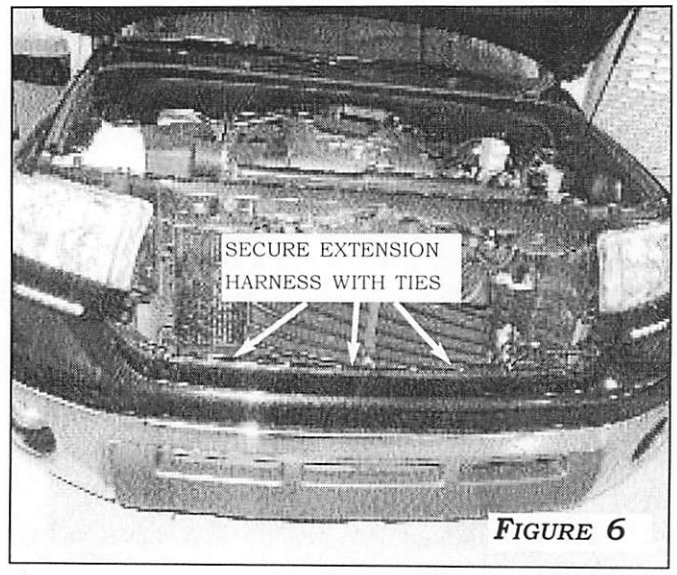

Figure 6

STEP 2: Electrical Installation (Continued) (see Figure 7)

NOTE: It is recommended to solder all electrical connections and cover with heat shrink tubing, see *Figure 8*. If soldering and heat shrink tubing is not an option, use the provided electrical connectors.

3. Secure the Control Module in the Driver's side of the engine bay using the provided double-sided tape and/or hardware. Be sure to thoroughly clean the area with isopropyl alcohol or other acceptable cleaner.
4. Connect the Power harness to the Control Module.
5. Connect Red wire from Power Harness to Fuse harness supplied.
6. Connect the Fuse harness to +12V Ignition source such as the cigarette lighter.
7. Connect Blue wire from Power Harness to +12V of Headlight or Headlight Switch.
8. Connect Black wire to vehicle Ground or Negative (-) battery terminal.

NOTE: If the DRLs are located within 100mm (ECE R87 states 25mm) of an indicator light, the DRL must dim when the indicator is operated. Use the Indicator harness provided and connect as follows:

- Connect the Red wire of the Indicator Harness to +12V Driver Side Indicator Light (Turn signal).
- Connect the Blue wire of the Indicator Harness to +12V Passenger Side Indicator Light (Turn signal).

STEP 3: Test All Functions

NOTE: Make sure the DRLs are connected to the Control Module prior to reconnecting the Battery.

1. Reconnect the Battery.
2. Ensure DRLs remain on while the ACC power is on.
3. Ensure DRLs dim when headlights are turned on.
4. If using the Indicator Harness, ensure DRL dims when respective indicator light is turned on.

STEP 4: Reassembly

1. Reassemble the vehicle.
2. Secure all wires with Zip ties away from the engine and any sharp/moving objects.

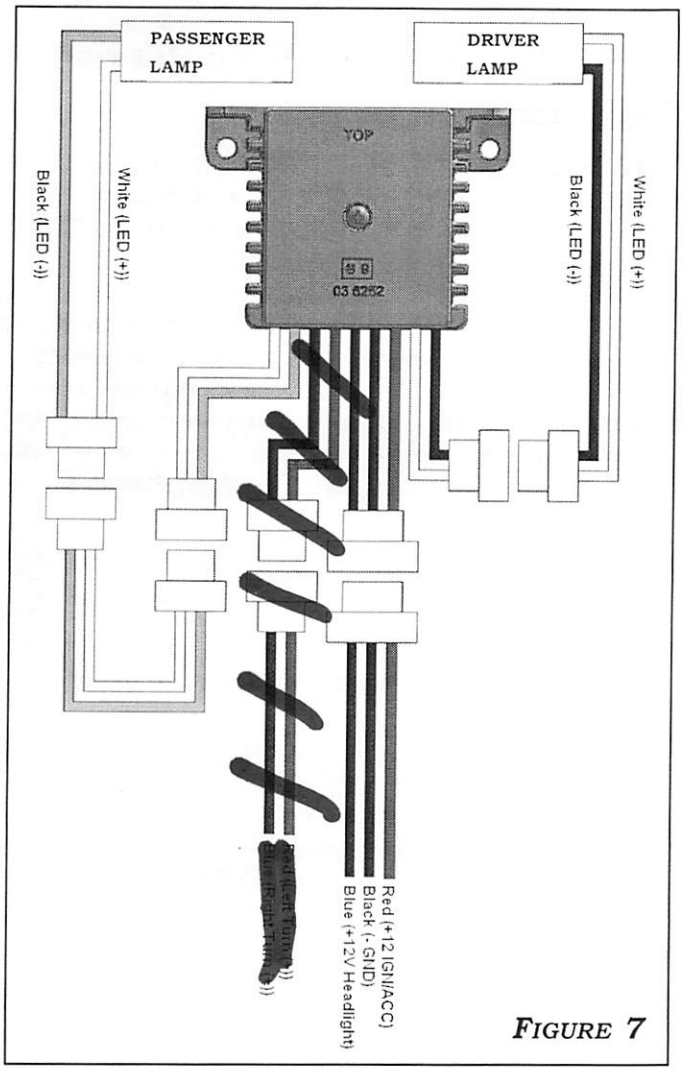

Figure 7

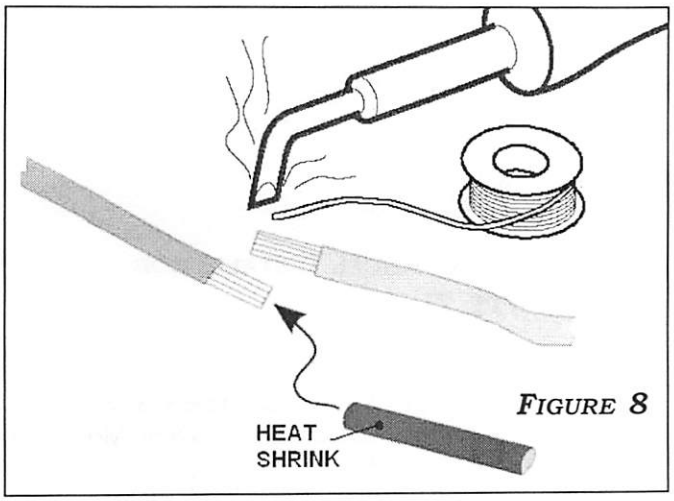

Figure 8

Rostra Precision Controls, Inc.

PART NUMBER: UNIVERSAL

GENERAL APPLICABILITY

UNIVERSAL

KIT CONTENTS

ITEM	QTY	DESCRIPTION
1	2	LED DAYTIME RUNNING LIGHTS*
2	1	CONTROL MODULE
3	1	DRL EXTENSION HARNESS
4	1	FUSE ADAPTOR HARNESS
5	1	GROUND HARNESS
6	1	ILLUMINATION HARNESS

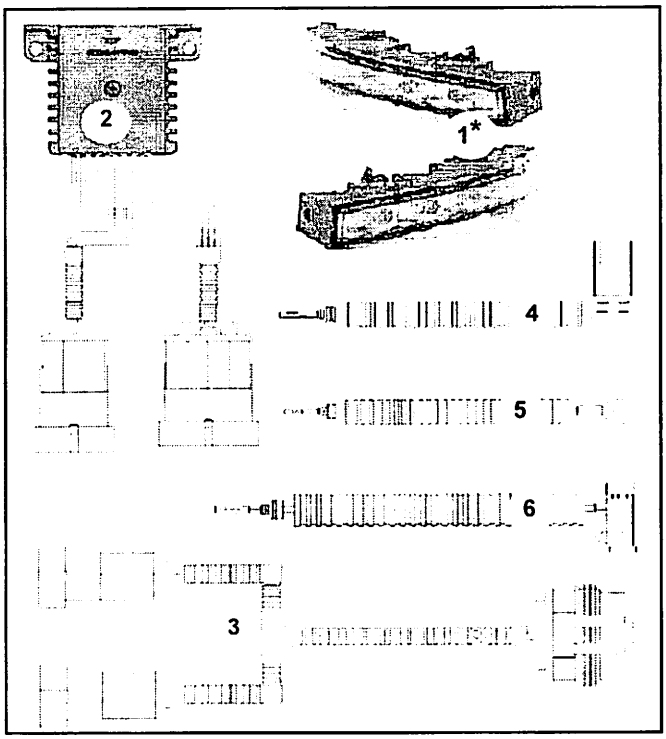

* LIGHTS SHOWN FOR REFERENCE ONLY

UNIVERSAL HARDWARE KIT CONTENTS**

ITEM	QTY	DESCRIPTION
1	12	WIRE ZIP TIES
2	4	BOLTS W/ WASHERS
3	4	FOAM WASHERS
4	8	PAN HEAD SCREWS
5	8	NUTS
6	3	ELECTRICAL CONNECTORS
7	2	#10-32 PAN HEAD SCREW
8	2	#10-32 NUT W/LOCKWASHER
9	1	VHB TAPE
10	4	BRACKETS

** HARDWARE KIT (260-5000-UNI) SOLD SEPARATELY

RECOMMENDED TOOLS

PERSONAL & VEHICLE PROTECTION	
SAFETY GLASSES	
MASKING TAPE	
SPECIAL TOOLS	
VOLT-OHM METER	
RECOMMENDED INSTALLATION TOOLS	
TRIM REMOVAL TOOL	PHILLIPS SCREWDRIVER
TAPE MEASURE	10-MM WRENCH
DRILL BITS	SOLDERING TOOL
WIRE CUTTERS	SHARP KNIFE
SPECIAL CHEMICALS	

CONFLICTS

NOTE:

LEGEND

STOP: DAMAGE TO VEHICLE MAY OCCUR. DO NOT PROCEED UNTIL PROCESS COMPLIANCE HAS BEEN MET.

OPERATOR SAFETY: USE CAUTION TO AVOID RISK OF INJURY.

CRITICAL PROCESS: PROCEED WITH CAUTION TO ENSURE A QUALITY INSTALLATION. THESE POINTS WILL BE AUDITED ON A COMPLETED VEHICLE INSTALLATION.

GENERAL PROCESS: THIS HIGHLIGHTS SPECIFIC PROCESSES TO ENSURE A QUALITY INSTALLATION. THESE POINTS WILL BE AUDITED DURING THE ACCESSORY INSTALLATION.

TOOLS & EQUIPMENT: THIS CALLS OUT THE SPECIFIC TOOLS AND EQUIPMENT REQUIRED FOR THE PROCESS.

REVISION MARK: THIS MARK HIGHLIGHTS A CHANGE IN INSTALLATION WITH RESPECT TO PREVIOUS ISSUE.

NOTE!

- INSTALLATION MUST BE DONE IN STRICT ACCORDANCE WITH THE INSTALLATION INSTRUCTIONS.
- DAYTIME RUNNING LIGHTS (DRLS) ARE DESIGNED TO TURN ON WITH IGNITION AND REMAIN ON UNTIL IGNITION IS TURNED OFF. DRLS ARE NOT A SUBSTITUTE FOR HEADLIGHTS AT DUSK/DAWN OR DURING DARKNESS.

IMPORTANT

NOTE!

- THE DRLS COME PROGRAMMED TO BE USED AS POSITION LIGHTS (DIMMING THE DRLS WHEN THE HEADLIGHT SWITCH IS ON). TO TURN THE POSITION FEATURE OFF, CONNECT THE DRLS AS DESCRIBED IN THE INSTRUCTIONS BELOW, THEN:
  - TURN ACC/IGNITION ON.
  - QUICKLY TURN THE HEADLIGHT SWITCH ON AND OFF THREE TIMES AND THE FOURTH TIME LEAVE THEM ON. NOTE: THE DRLS WILL FLASH MOMENTARILY.
  - QUICKLY TURN THE HEADLIGHT SWITCH ON AND OFF TWO TIMES AND THE THIRD TIME LEAVE THEM ON. THIS WILL TURN THE POSITION LIGHT FEATURE OFF.
  - TO TURN THE POSITION LIGHT FEATURE ON, REPEAT THE STEPS ABOVE.
- PLEASE ENSURE ALL WIRING IS LAID SO THAT IT CANNOT BE PULLED OR ABRADED AND IS SECURELY FASTENED WITH WIRE TIES.

ATTENTION: FOGGING OF THE LENSES

MODERN HEADLAMPS ARE VENTILATED TO AVOID CORROSION. THIS MEANS THAT IN CERTAIN CONDITIONS CONDENSATION COLLECTS INSIDE OF THE LENS. THIS SHOULD DISAPPEAR SHORTLY AFTER THE DRL IS TURNED ON.

FOGGING OF THE LENS IS NO REASON FOR COMPLAINT!

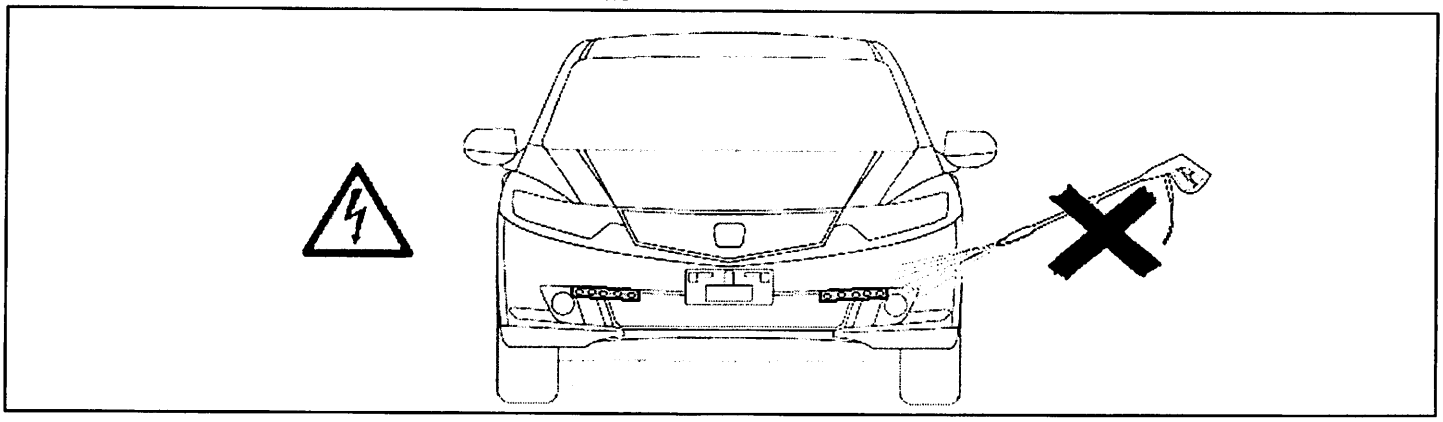

INSTALLATION

STEP 1: DRL MOUNTING INSTRUCTIONS

1. IT IS ADVISABLE TO DISCONNECT THE NEGATIVE BATTERY CABLE FOR 3 MINUTES BEFORE BEGINNING INSTALLATION TO AVOID UNINTENDED AIR BAG DEPLOYMENT.

NOTE: RECORD ANY ANTI-THEFT RADIO CODES PRIOR TO DISCONNECTING.

2. MAKE SURE THE INSTALLATION POSITION OF THE ROSTRA DRLS CONFORMS TO THE DIAGRAMS IN ***FIGURES 2, 3 & 4.***

INSTALLATION REQUIREMENTS:

- LIGHTS MUST BE MOUNTED NO LESS THAN 250MM (10") AND NO MORE THAN 1067MM (42") ABOVE THE GROUND (ECE R87 STATES NO MORE THAN 1500MM (59") ABOVE GROUND). IF DRLS ARE TO BE USED AS A POSITION LIGHTS AS WELL, LIGHTS MUST BE MOUNTED NO LESS THAN 350MM (14") ABOVE THE GROUND. ***FIGURE 2***
- THE CENTER LINE OF THE LIGHT MUST BE PARALLEL TO THE GROUND. ***FIGURE 3***

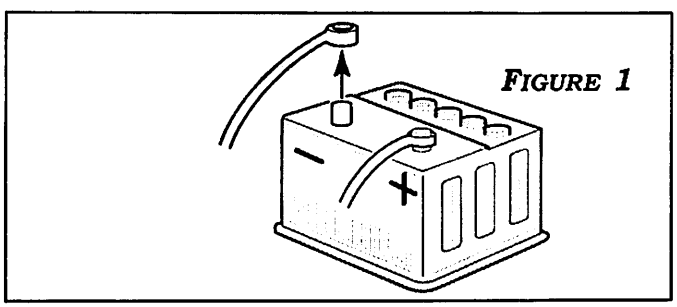

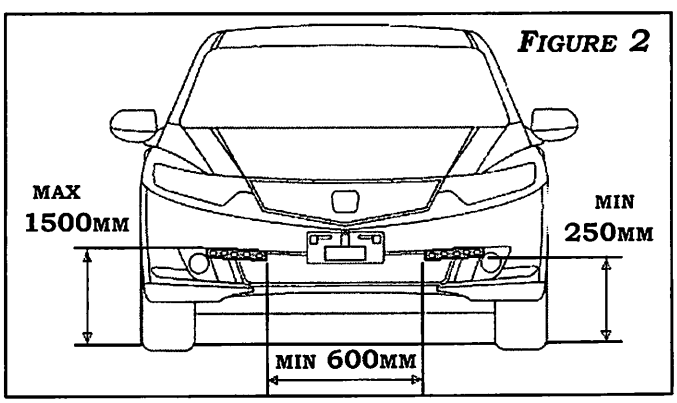

STEP 1: DRL Mounting Instructions (Cont'd)

- The reference axis of the light must be parallel to the longitudinal axis of the vehicle (i.e. the lens of the light should be vertical to the ground and perpendicular to the direction of travel). *Figure 4*
- Light must be visible from 20° inboard and outboard, as well as from 10° above and below the horizontal axis.
- Two Lights are required for motor vehicles.
- Lights to be mounted within 400mm (16") of the widest point of the vehicle and no closer than 600mm (24") together.
- If the DRLs are located within 100mm (ECE R87 states 25mm) of an indicator light, the DRL must dim when the indicator is operated. Use the Indicator harness provided.

3. Using the hardware provided separately (250-5000-UNI), mount the DRLs according to the requirments above. Depending on your car model, the customized installation may be performed:

- with or without the supplied brackets and hardware.
- with or without cutting or modifying the vehicle surfaces.

NOTE: You may use the M6 tapped holes on the light module's body for any other type of mounting.

STEP 2: Mount Control Module

NOTE: Be sure to layout and test fit all wiring before mounting Control Module.

1. Using the hardware provided separately (2 - #10-32 Pan Head Screws and 2 - #10-32 Nuts w/Lockwasher), mount the Control Module within 24-30" of the Fuse Box. Bracket fabrication may be necessary for optimal Module location.
use the provided electrical connectors.

STEP 3: Electrical Installation

NOTE: It is recommended to solder all electrical connections and cover with heat shrink tubing, see *Figure 6*. If soldering and heat shrink tubing is not an option, use the provided electrical connectors.

1. Unplug the Blank 3-Pin Connector from the Control Module harness.
2. Insert the Terminals into the Blank Connector as shown in **Figures 5 & 7**:

Fuse Adaptor Harness (red wire) into Pin 2
Ground Harness (Black Wire) into Pin 1
Illumination Harness (Blue Wire) into Pin 3

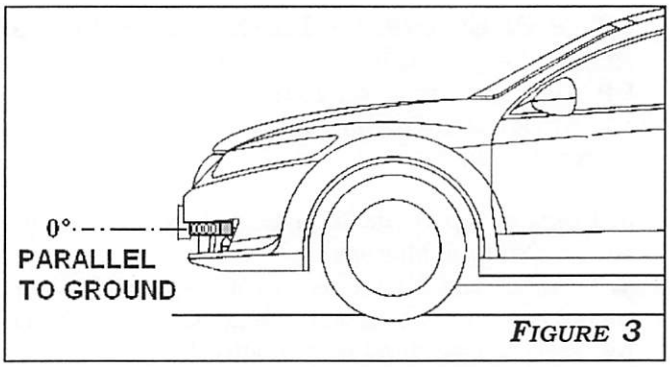

Figure 3

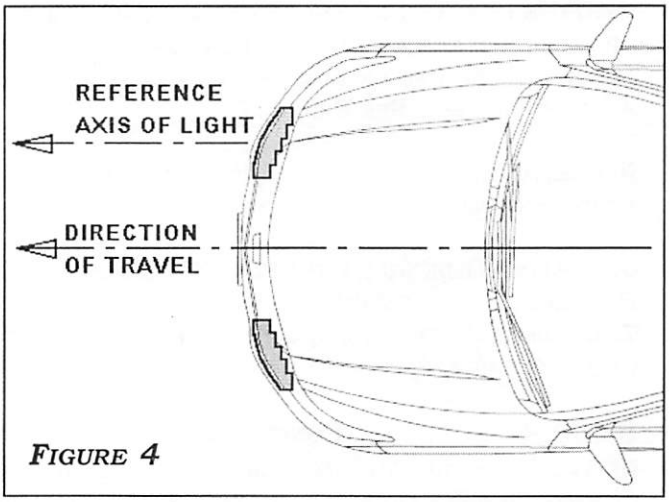

Figure 4

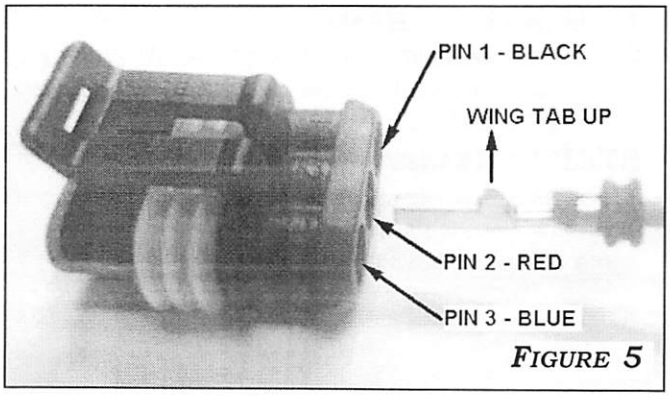

Figure 5

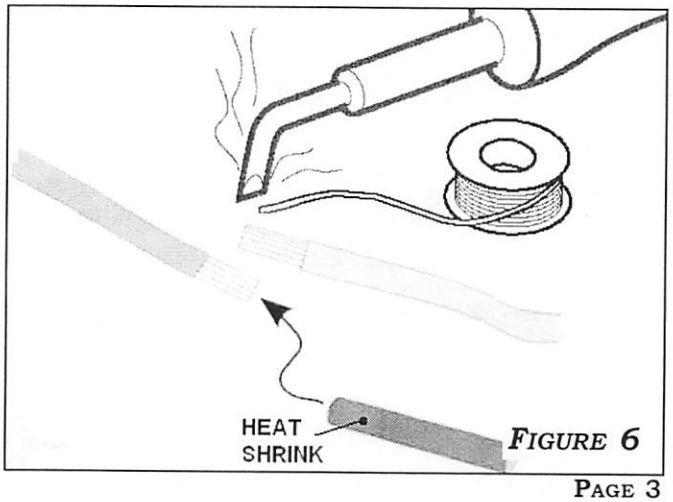

Figure 6

STEP 3: Electrical Installation (Cont'd)

NOTE: Be sure to insert the terminals with Wing Tabs **UP**. Insert the terminal until the it stops and you feel a positive click. Gently pull on the wire to ensure the terminal is secured.

3. Connect the 3-pin Connector of the power harness to the Control Module.
4. Connect the 4-pin Connector of the DRL Extension Harness to the Control Module. Connect the DRLs to the 2-pin Connectors of the DRL Extension Harness.
5. Locate an ATM Mini Fuse on the Ignition Circuit in the Fuse Box. Using a fuse removal tool, remove the mini fuse and replace it with the Fuse Adaptor. Place the ATM Mini Ignition Fuse in the open slot of Fuse Adaptor harness. **See Figure 7**

NOTE: ATM Mini Fuse may need to be replaced with of equivalent value fuse with longer leads.

6. Connect Blue wire from Power Harness to +12V of Headlight or Headlight Switch.
7. Connect Black wire to vehicle Ground or Negative (-) battery terminal.

STEP 4: Test All Functions

NOTE: Make sure the DRLs are connected to the Control Module prior to reconnecting the Battery.

1. Reconnect the Battery.
2. Ensure DRLs remain on while the ACC power is on.
3. Ensure DRLs dim when headlights are turned on.

STEP 5: Reassembly

1. Reassemble the vehicle.
2. Secure all wires with Zip ties away from the engine and any sharp/moving objects.

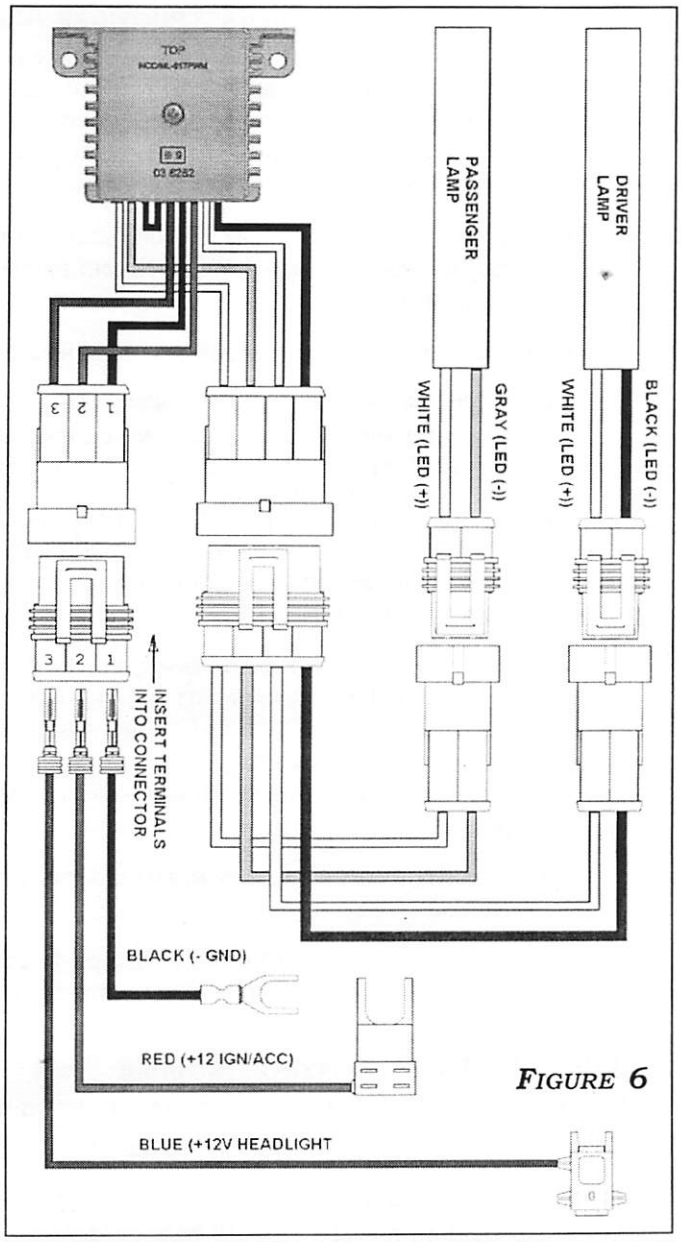

Figure 6

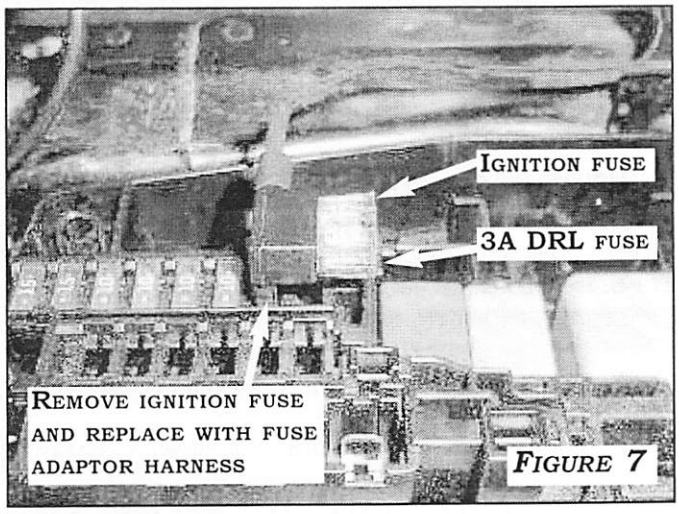

Figure 7